4 in. 3000K, 2300lm TranquiLED Low Glare LED Downlight with 0-10V Dimming

- Unique reflector produces low-glare lighting – ideal for offices, conference rooms, retail spaces, hotels, restaurants and more
- Specially-designed heatsink provides excellent thermal management – extends life of LED source
- Clean, consistent light scallop with homogenous illumination throughout
- ETL Listed – no additional hardware or housing required for installation
- IC-Rated – suitable for insulation contact on or around housing
- Ideal for both retrofit installation and new construction
- Thin profile – ideal for ceilings with small plenum spaces
- LED replacement for 2x26W CFL downlights
- 3000K - warm white
- 0-10V Dimming - compatible with most commercial dimmers*
- Energy efficient, long-lasting LED – over 45% reduction in energy costs compared to incandescent downlights
- 50,000 rated lifetime
- 5-year limited warranty

* Dimming range may vary based on dimmer used

Specifications	
Model	D4TQ-C30-W27-V277
Part Number	70253
Color Temperature	3000K
Lumen Output	2300lm
Wattage	27W
Efficacy	85lm/W
CRI	90
Beam Angle	70º
Dimmable	0-10V
Voltage	100-277V
Power Factor	0.9
Operating Temperature	-25ºC to 40ºC
Weight	21.44 oz.
Dimensions	6.02 x 4.41 x 6.02 in
Rated Lifetime	50,000 Hours
Warrenty	5-Year Limited Warranty
Energy Star Product Listing	D4TQ-C30-W27-V277

Certifications:

ENERGY STAR

C ETL LISTED US
Intertek

4 in. 3000K, 2300lm TranquiLED Low Glare LED Downlight with 0-10V Dimming

Beam Angle:

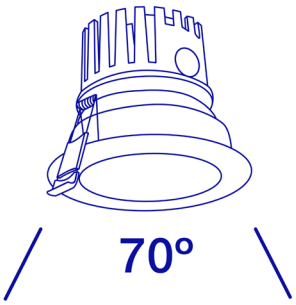

Dimensions:

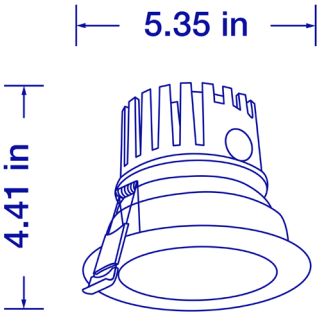

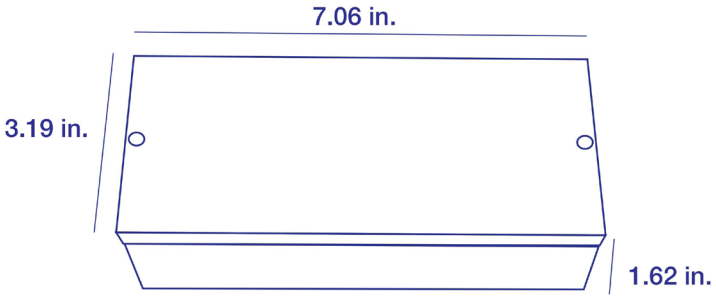

Polar Plots:

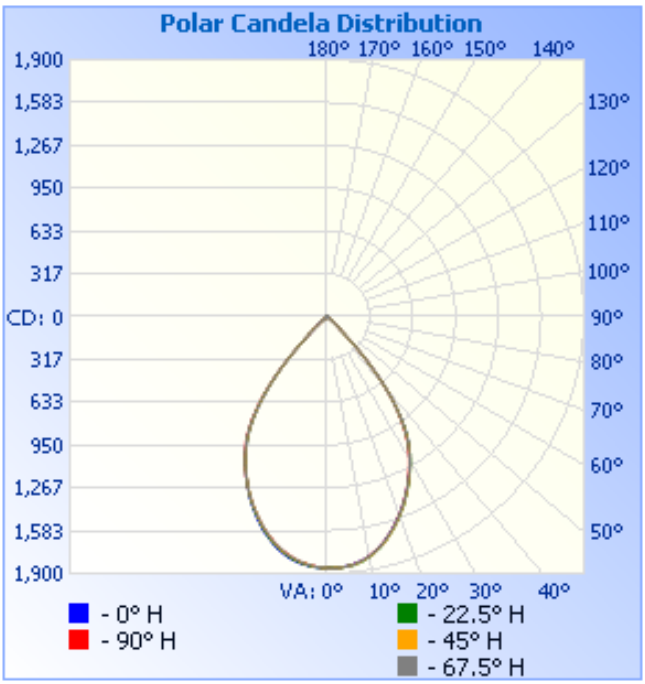

Verbatim™
Technology you can trust®