# 4 in. 4000K, 2500lm TranquiLED Low Glare LED Downlight with 0-10V Dimming

- Unique reflector produces low-glare lighting – ideal for offices, conference rooms, retail spaces, hotels, restaurants and more
- Specially-designed heatsink provides excellent thermal management – extends life of LED source
- Clean, consistent light scallop with homogenous illumination throughout
- ETL Listed – no additional hardware or housing required for installation
- IC-Rated – suitable for insulation contact on or around housing
- Ideal for both retrofit installation and new construction
- Thin profile – ideal for ceilings with small plenum spaces
- LED replacement for 2x26W CFL downlights
- 4000K - cool white
- 0-10V Dimming - compatible with most commercial dimmers*
- Energy efficient, long-lasting LED – over 45% reduction in energy costs compared to incandescent downlights
- 50,000 rated lifetime
- 5-year limited warranty

* Dimming range may vary based on dimmer used

| Specifications | |
|---|---|
| Model | D4TQ-C40-W27-V277 |
| Part Number | 70254 |
| Color Temperature | 4000K |
| Lumen Output | 2500lm |
| Wattage | 27W |
| Efficacy | 93lm/W |
| CRI | 90 |
| Beam Angle | 70º |
| Dimmable | 0-10V |
| Voltage | 100-277V |
| Power Factor | 0.9 |
| Operating Temperature | -25ºC to 40ºC |
| Weight | 21.44 oz. |
| Dimensions | 6.02 x 4.41 x 6.02 in |
| Rated Lifetime | 50,000 Hours |
| Warrenty | 5-Year Limited Warranty |
| Energy Star Product Listing | D4TQ-C40-W27-V277 |

## Certifications:

ENERGY STAR

C ETL LISTED US
Intertek

# 4 in. 4000K, 2500lm TranquiLED Low Glare LED Downlight with 0-10V Dimming

## Beam Angle:

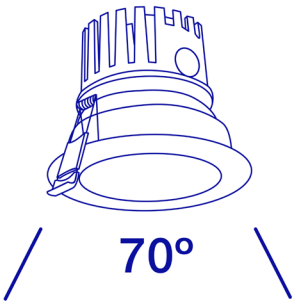


## Dimensions:

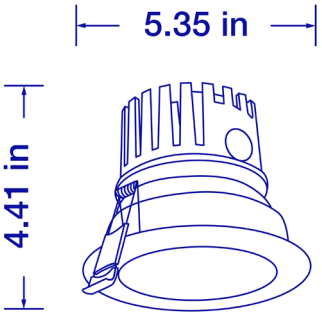


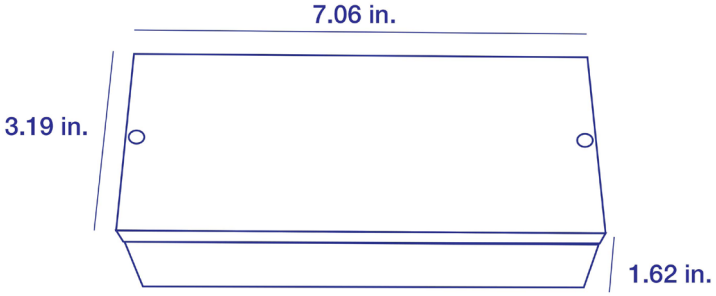


## Polar Plots:

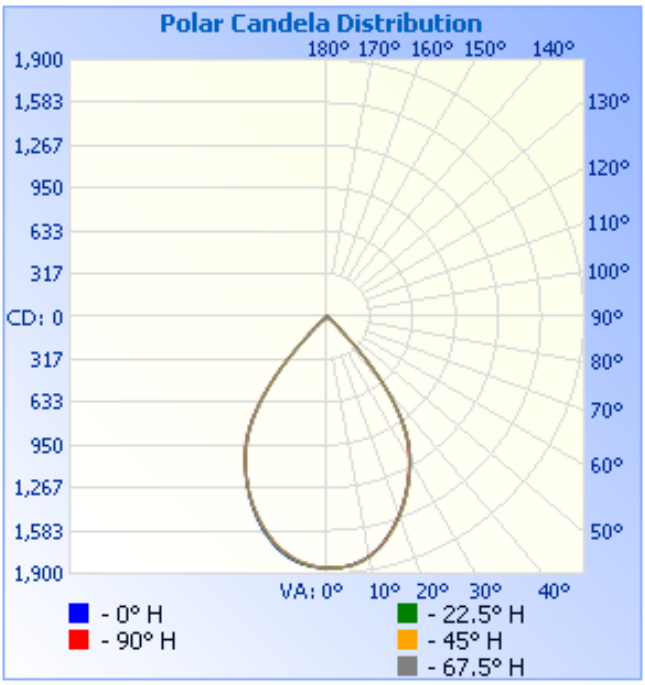




Verbatim™
Technology you can trust®