6 in. 4000K, 1300lm TranquiLED Low Glare LED Downlight with Phase-Cut Dimming

- Unique reflector produces low-glare lighting – ideal for offices, conference rooms, retail spaces, hotels, restaurants and more
- Specially-designed heatsink provides excellent thermal management – extends life of LED source
- Clean, consistent light scallop with homogenous illumination throughout
- ETL Listed – no additional hardware or housing required for installation
- IC-Rated – suitable for insulation contact on or around housing
- Ideal for both retrofit installation and new construction
- Thin profile – ideal for ceilings with small plenum spaces
- LED replacement for 120W incandescent downlights
- 4000K - cool white
- Phase-cut dimming - compatible with most commercial dimmers*
- Energy efficient, long-lasting LED – over 85% reduction in energy costs compared to incandescent downlights
- 50,000 rated lifetime
- 5-year limited warranty

* Dimming range may vary based on dimmer used

Specifications	
Model	D6TQ-C40-W14-V120
Part Number	70264
Color Temperature	4000K
Lumen Output	1300lm
Wattage	14W
Efficacy	93lm/W
CRI	90
Beam Angle	70º
Dimmable	Yes
Wet Rated?	No
Voltage	120V
Power Factor	0.9
Operating Temperature	-25ºC to 40ºC
Weight	21.12 oz.
Dimensions	7.87 x 5.04 x 7.87 in
Rated Lifetime	50,000 Hours
Warrenty	5-Year Limited Warranty
Energy Star Product Listing	D6TQ-C40-W14-V120

Certifications:

ENERGY STAR

C ETL LISTED US
Intertek

6 in. 4000K, 1300lm TranquiLED Low Glare LED Downlight with Phase-Cut Dimming

Beam Angle:

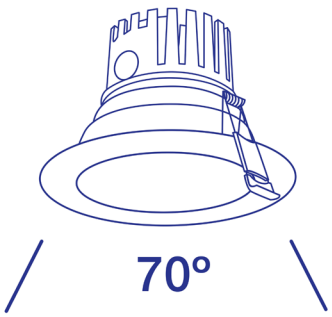

Dimensions:

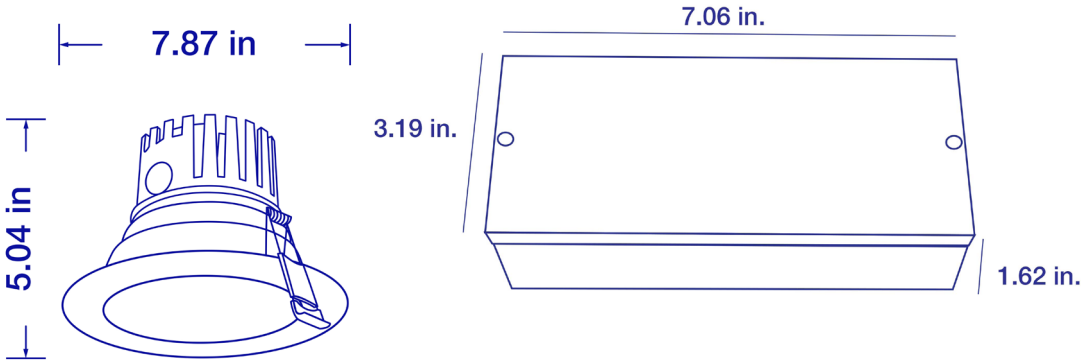

Polar Plots:

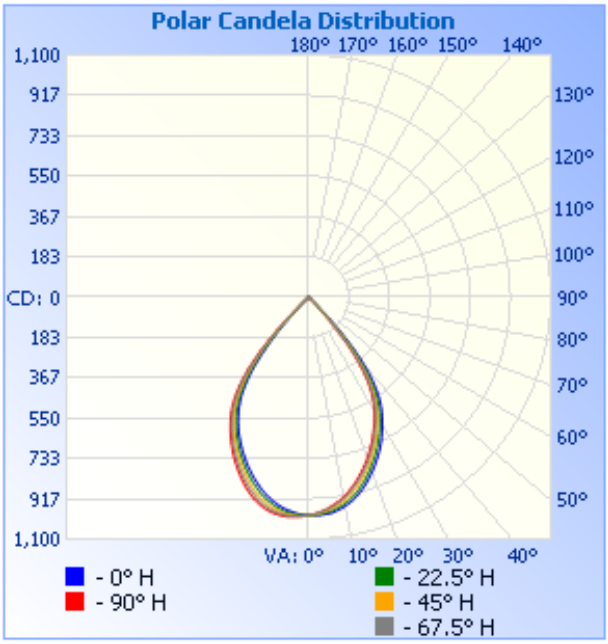

Verbatim™
Technology you can trust®