6 in., 800/1200/1600lm CCT Selectable LED Downlight

- CCT selectable – downlight easily switches between 3000K, 3500K, and 4000K with integrated switch
- Title 24 compliant - exceeds California Energy Commission standards
- Wattage Selectable - easily choose 9W, 13W, or 19W light output with integrated switch
- 90CRI
- 120V-277V compatible
- 0-10V dimmable, Compatible with most commercial dimmers*
- 50,000 hour design lifetime
- 5-year limited warranty

*Dimming range may vary based on dimmer used.

Specifications	
Model	D6-3CCT-3W-CD
Part Number	71158
Color Temperature	3000/ 3500/ 4000K
Lumen Output	800 / 1200 / 1600lm
Wattage	9 / 13 / 19W
Power Factor	0.9
CRI	90
Efficacy	~90lm/W
Beam Angle	100°
Dimmable	0-10V
Wet Rated?	No
Voltage	120-277V
Operating Temperature	-30°C to 40°C
Base	N/A
Weight	26.24 oz.
Dimensions	8.44 x 4.44 x in
Design life	50,000 Hours
Warranty	5-year limited warranty

Certifications:

ENERGY STAR

Intertek

6 in., 800/1200/1600lm CCT Selectable LED Downlight

Additional Images:

Polar Plots:

19W, 3000K

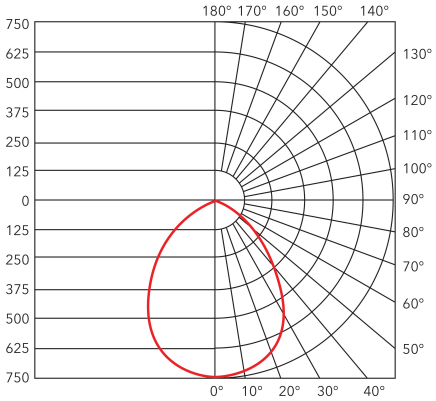
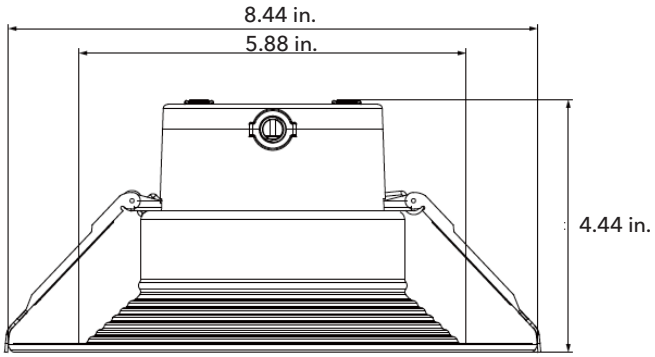
Dimensions: