8 in., 1500/2000/2500lm CCT Selectable LED Downlight

- CCT selectable – downlight easily switches between 3000K, 3500K, and 4000K with integrated switch
- Title 24 compliant - exceeds California Energy Commission standards
- Wattage Selectable - easily choose 16.5W,23W,or 29W light output with integrated switch
- 90CRI
- 120V-277V compatible
- 0-10V dimmable, Compatible with most commercial dimmers*
- 50,000 hour design lifetime
- 5-year limited warranty

*Dimming range may vary based on dimmer used.

Specifications	
Model	D8-3CCT-3W-CD
Part Number	71159
Color Temperature	3000/ 3500/ 4000K
Lumen Output	1500 / 2000 / 2500lm
Wattage	16.5 / 23 / 29W
Power Factor	0.9
CRI	90
Efficacy	~90lm/W
Beam Angle	100°
Dimmable	0-10V
Wet Rated?	No
Voltage	120-277V
Operating Temperature	-30°C to 40°C
Base	N/A
Weight	30.88 oz.
Dimensions	10.06 x 4.75 x in
Design life	50,000 Hours
Warranty	5-year limited warranty

Certifications:

ENERGY STAR

C ETL LISTED US Intertek

FC

8 in., 1500/2000/2500lm CCT Selectable LED Downlight

Additional Images:

Polar Plots:

29W, 3000K

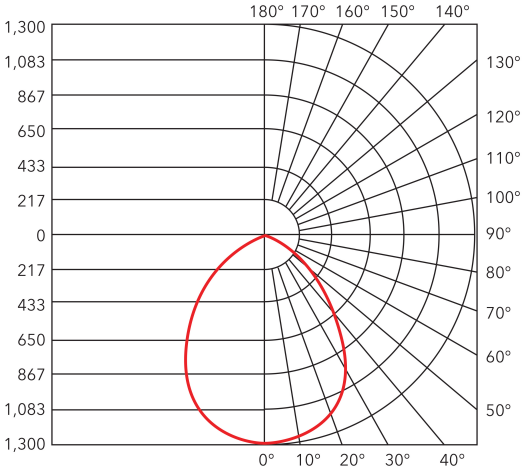
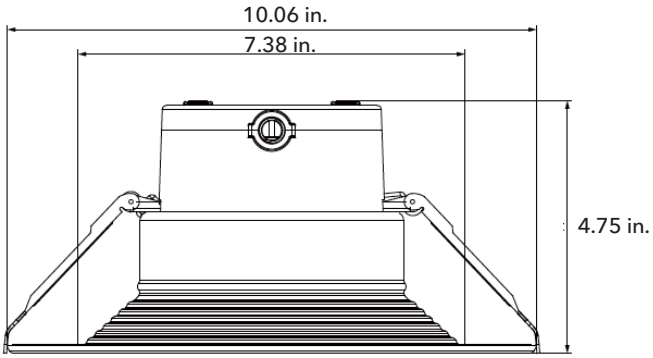
Dimensions: