4 ft. 4000K, 2520lm Dimmable RetroStick LED - 30pk

- Ideal low cost retrofit solution for fluorescent troffers and strips
- Quick and simple installation saves labor costs - including magnetic clips for each fixture
- Highly reliable direct power solution – eliminates ballasts and tombstones
- End-to-End PlugNPlay connectivity without light gaps (up to 12pcs), jumper cords* also available for maneuverability – suitable for cove lighting, educational, transportation, manufacturing and residential environments.
  *sold separately
- High efficacy – 140lm/W
- Delamp 2 for 1 – two connected fixtures will produce over 5,000 lumens.
- Eliminate waste by using the existing troffer housing
- Mounting bracket available for fastening to non-magnetic surfaces (sold separately)
- 18W bare lamp wattage – maximizes return on investment
- High quality illumination– frosted diffuser produces uniform luminescence and a wide light angle
- 4000K – cool white
- 120V- Triac dimmable
- Energy efficient, long-lasting LED – significantly reduces energy costs compared to fluorescent tubes
- 50,000 hours rated lifetime
- 5-year limited warranty

*Sold separately

Specifications	
Model	LN-4FT-C40-W18-D
Part Number	71172
Color Temperature	4000K
Lumen Output	2520lm
Wattage	18W
Power Factor	0.9
CRI	80
Efficacy	140lm/W
Dimmable	Yes
Voltage	120V
Input Current	200mA
Operating Temperature	-20°C to 40°C
Weight	8.8 oz.
Dimensions	43.30 x 1.41 x 0.87 in
Rated Lifetime	50000 Hours
Warranty	5 Year LED Warranty
DLC Product Listing	LN-4FT-C40-W18-D

Certifications:

4 ft. 4000K, 2520lm Dimmable RetroStick LED - 30pk

Additional Images:

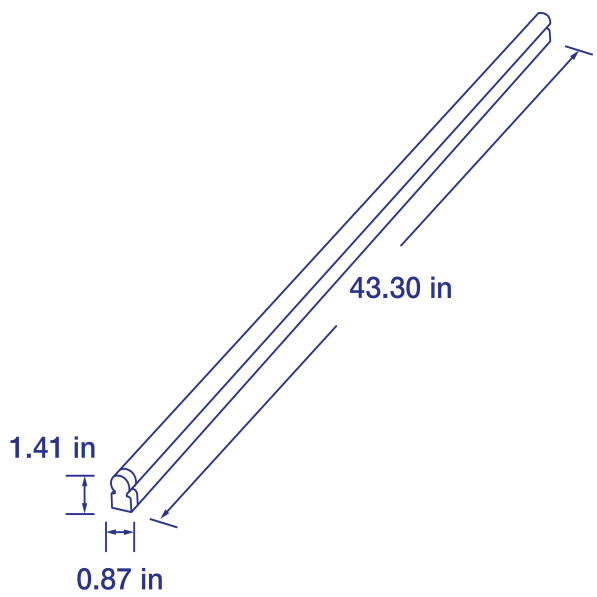

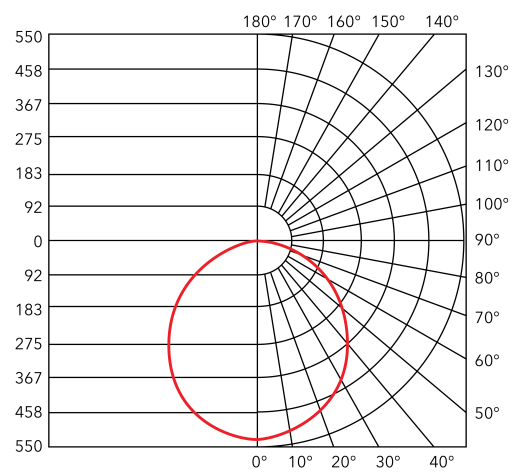

Available accessories:

12" Power Cable
(70402)

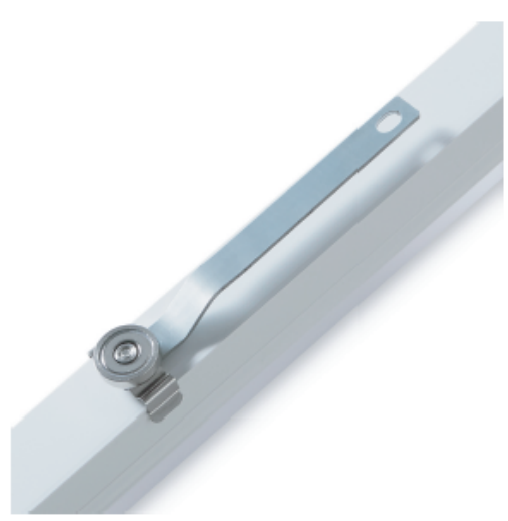

T5 Stick Bracket
(70407)

12" Jumper Cable
(70403)

7" Jumper Cable
(70404)

36" Power Cable
(70456)

12" Jumper Cable
(70457)